

Reneo SE 550-E R S21

Heat and energy recovery air handling units

- Power of electrical preheater: 1400
- Heat exchanger type: Counter flow
- Heat exchanger material: Enthalpy
- Sound-insulated casing
- Enthalpy heat exchanger
- Bypass: Auto
- Reheater: Optional
- Preheater: Built-in
- BMS protocol: ModBus
- Control: Smartphone
- Casing material: EPP
- Humidity sensor: Optional
- CO2 sensor: Optional
- PM2.5 sensor: Optional

	Unit of measurement	Reneo SE 550-E R S21
Phases	-	1
Maximum supply voltage	V	230
Minimum supply voltage	V	230
Power supply frequency	Hz	50/60
Power of electrical preheater	W	1400
Maximum airflow	m³/h	720
Heat recovery efficiency, max	%	85
Heat exchanger type	-	Counter flow
Heat exchanger material	-	Enthalpy
Weight	kg	55.5
Transported air temperature (max)	°C	40
Transported air temperature (min)	°C	-25
Ambient air temperature min	°C	1
Ambient air temperature max	°C	40
Ingress protection rating	-	IP22
Ambient air humidity max	%	60
Ingress protection rating of the drive	-	IP44

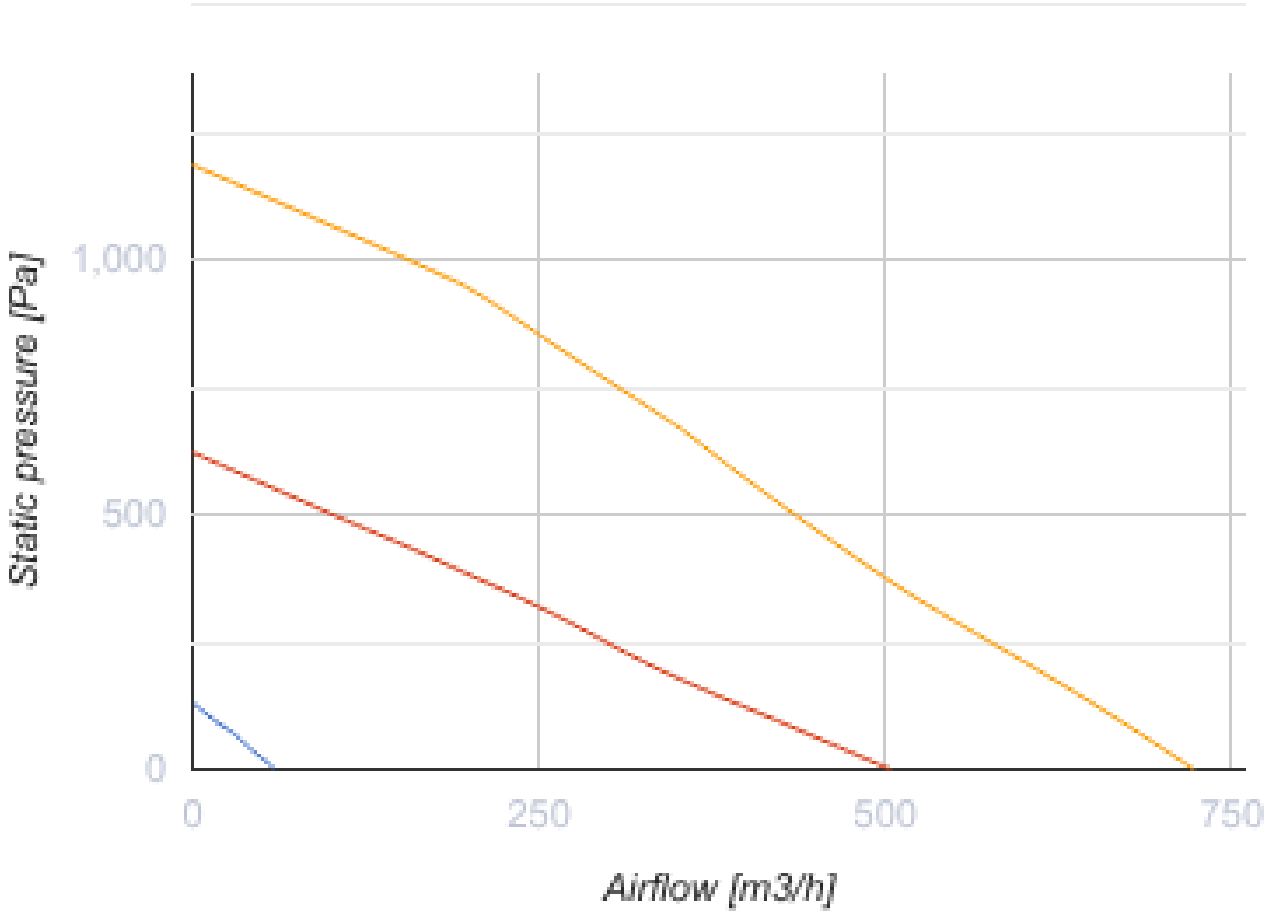

Dimensions

Ø D	H	H1	L	L1	W	W1
200	885	943	711	250	830	365

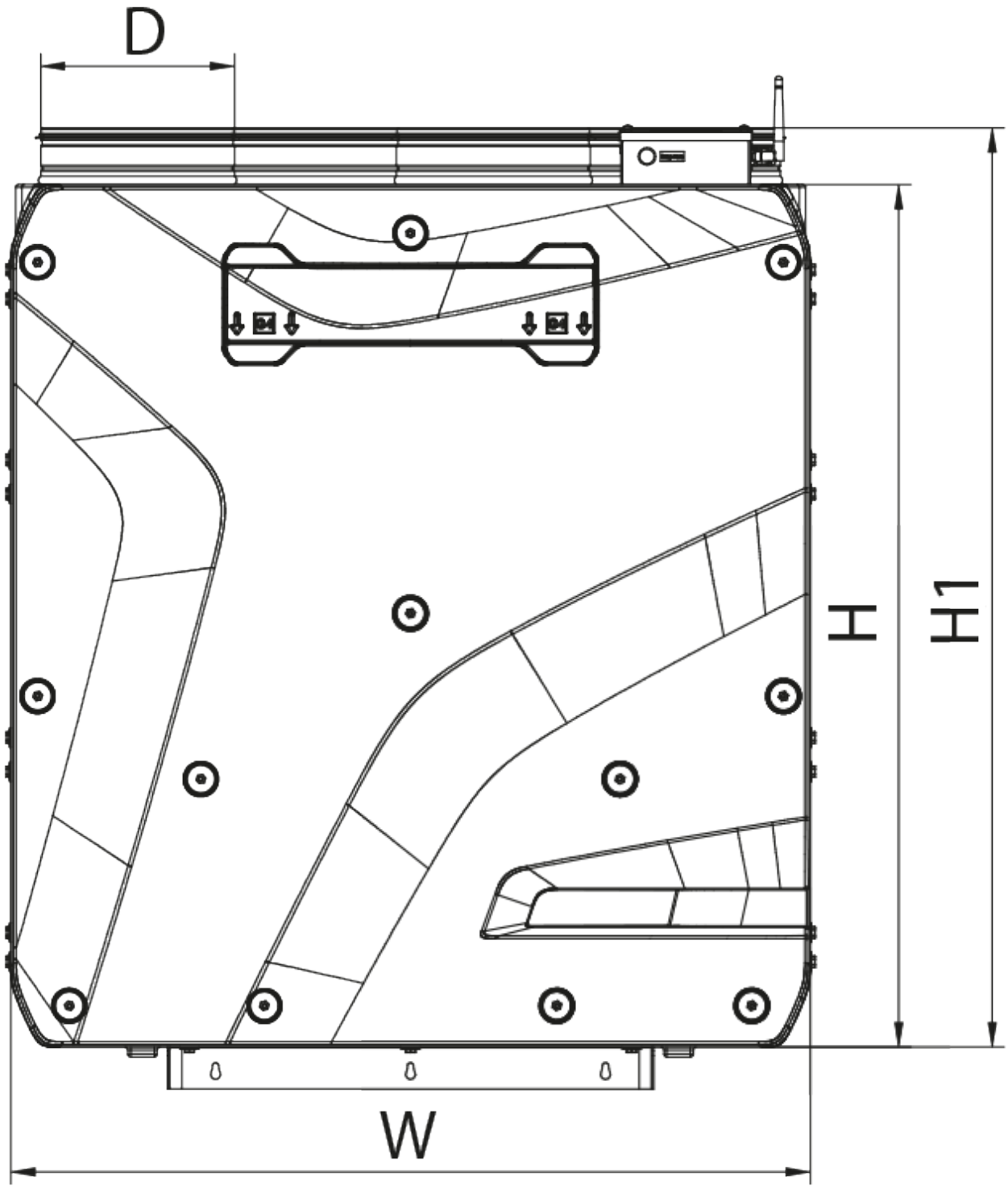
D
H
H1
W

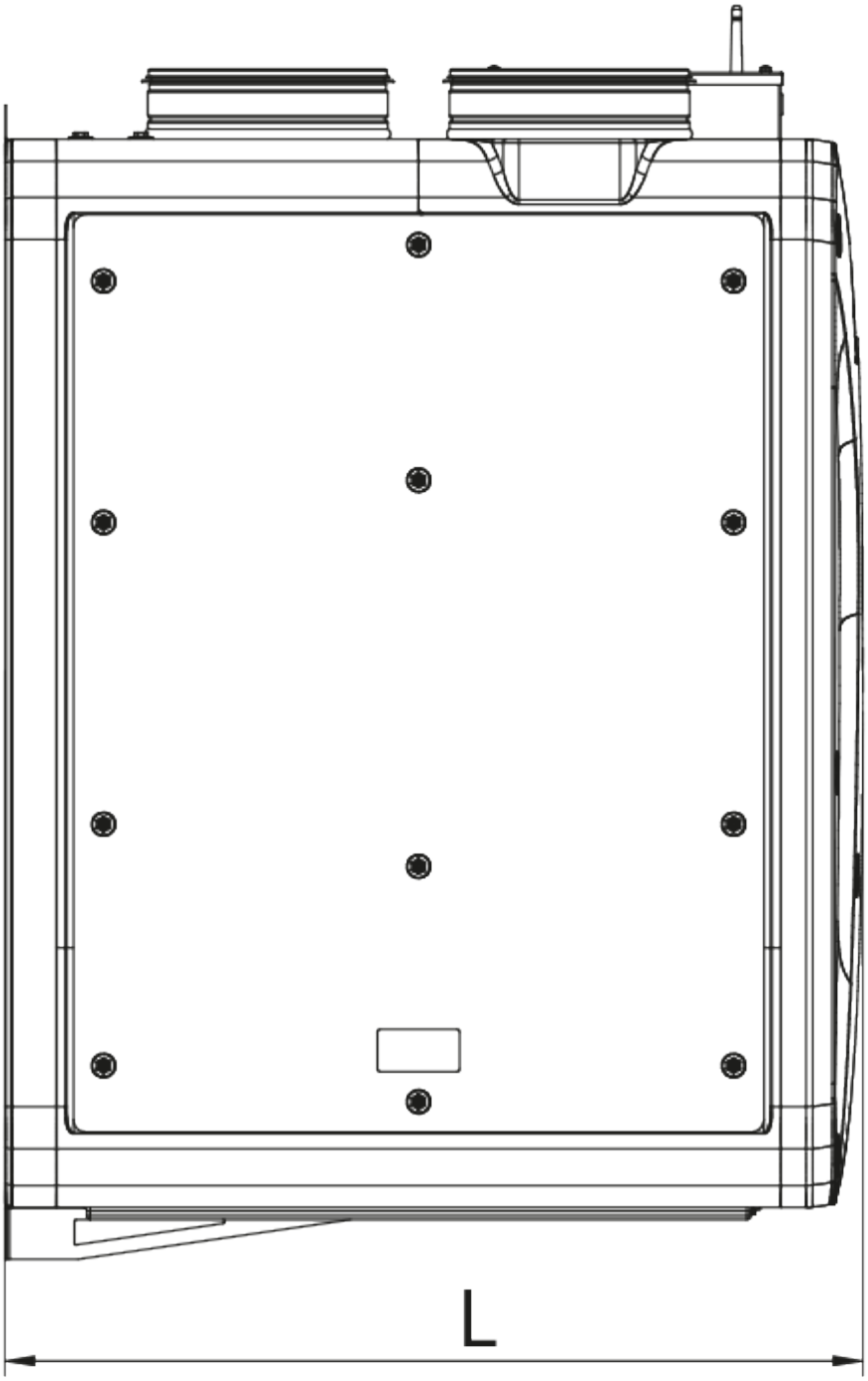
L

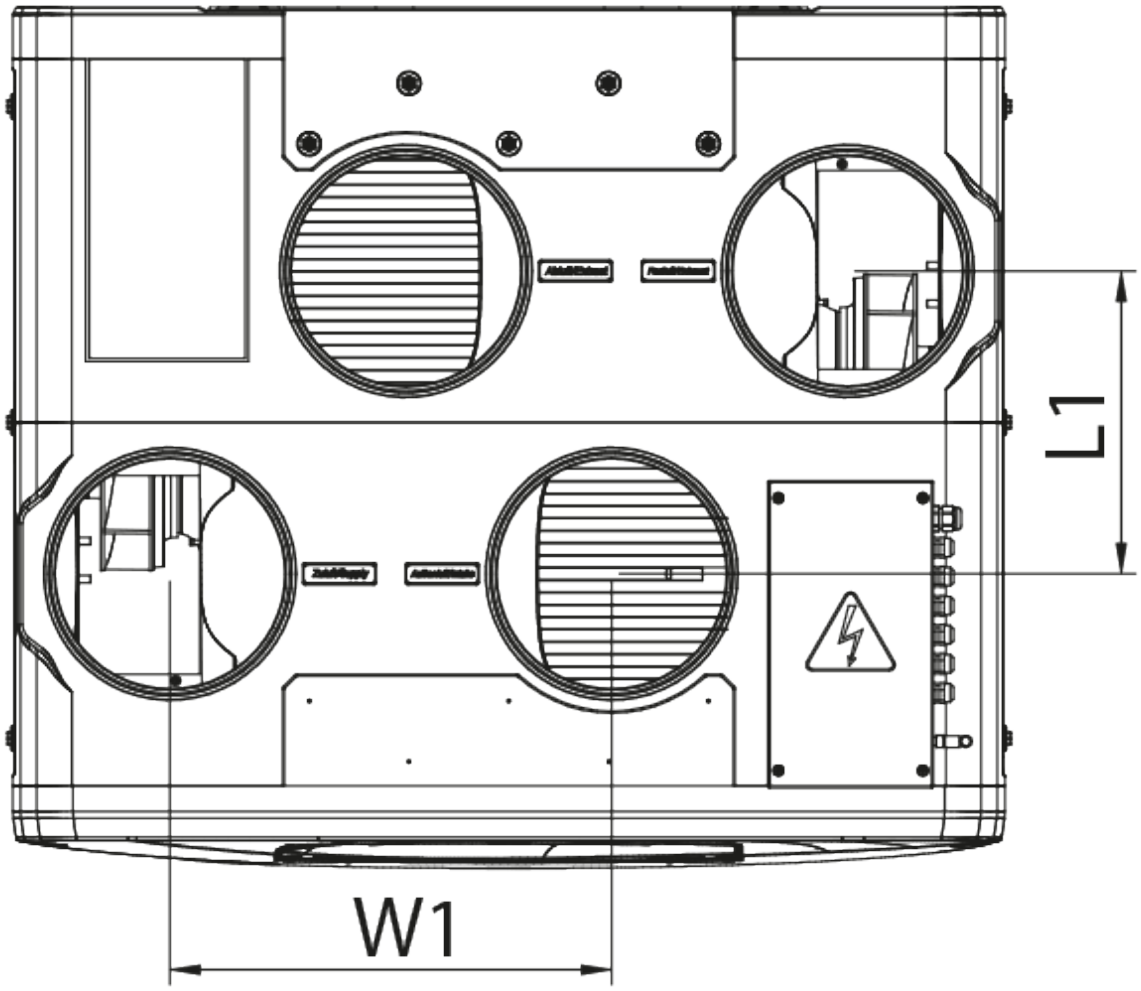
L1
W1

Ecodesign

Trademark	Blauberg					
Model	Reneo SE 550-E R S21					
Specific energy consumption (SEC) (kWh/(m²/a))	Cold		Average		Warm	
	-76.4	A+	-39.9	A	-16.3	E
Type of ventilation unit	Bidirectional					
Type of drive installed	Variable speed					
Type of heat recovery system	Recuperative					
Thermal efficiency of heat recovery (%)	75					
Maximum flow rate (m³/h)	667					
Electric power input (W)	341					
Reference flow rate (m³/s)	0.128					
Reference pressure difference (Pa)	50					
Specific power input (SPI) (W/(m³/h))	0.265					
Control typology	Local demand control					
Maximum internal leakage rates (%)	2.7					
Maximum external leakage rates (%)	2.7					
Sound power level (dB(A))	58					
The annual electricity consumption (AEC) (kWh/a)	Cold		Average		Warm	
	722		185		140	
The annual heating saved (AHS) (kWh/a)	Cold		Average		Warm	
	8574		4383		1982	

Accessories

For round ducts

Name	Photo	Description
SD 200/600		Silencers for round ducts
SD 200/900		Silencers for round ducts

SD 200/1200		Silencers for round ducts

For round ducts

Name	Photo	Description
VKA 200		Air dampers for round ducts

Electrical heaters

Name	Photo	Description
ENH 200-1.2-1 S21 V.2		Duct heater for supply air reheating
ENH 200-1.7-1 S21 V.2		Duct heater for supply air reheating
ENH 200-2.0-1 S21 V.2		Duct heater for supply air reheating

Control Panels

Name	Photo	Description
S25		LCD control panel
S22		Control panels
S22 Wi-Fi		Control panels

CO2 sensors

Name	Photo	Description
CD-1		CO2 sensors

CD-2		CO2 sensors

Humidity sensors

Name	Photo	Description
FS2		Humidity sensor

Other accessories

Name	Photo	Description
FP 596x164x60 ePM1 60% F7		F7 panel filter
FP 596x164x60 Coarse 90% G4		G4 panel filter

Electric actuators

Name	Photo	Description
Belimo TF230		Electric actuators