

Sileo Design 100 12

High-performance low noise extract fans

- Impeller type: Mixed-flow
- Casing material: Plastic
- Backdraft protection: Backdraft damper

	Unit of measurement	Sileo Design 100 12
Minimum supply voltage	V	12
Maximum supply voltage	V	12
Power supply frequency	Hz	50
Maximum airflow	m³/h	90
Weight	kg	0.66
Ambient air temperature min	°C	1
Ambient air temperature max	°C	40
Ingress protection rating	-	IP45
Impeller material	-	Plastic

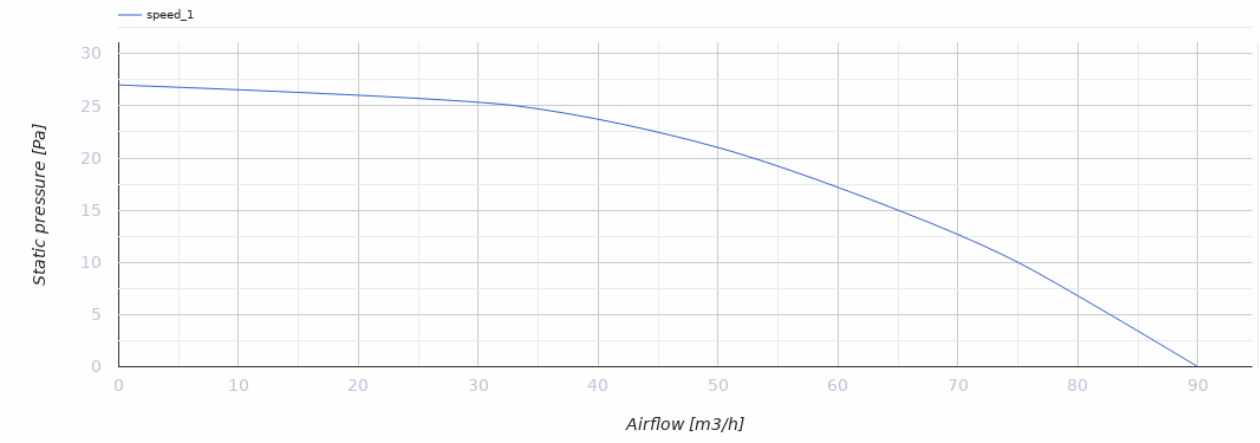

Dimensions

∅ D	B	L	L1
99	200	130	49

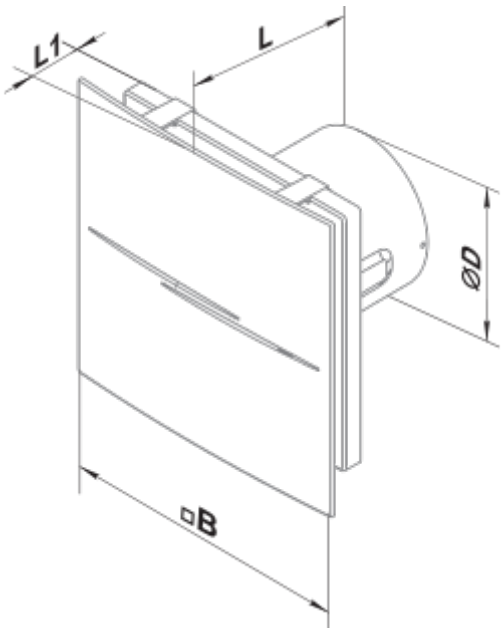

Ecodesign

Trademark	Blauberg					
Model	Sileo Design 100 12					
Specific energy consumption (SEC) (kWh/(m²/a))	Cold		Average		Warm	
	-30.6	B	-14.2	E	-4.8	F
Type of ventilation unit	Unidirectional					
Type of drive installed	Single speed					
Type of heat recovery system	None					
Maximum flow rate (m³/h)	90					
Electric power input (W)	8.5					
Reference flow rate (m³/s)	0.018					
Specific power input (SPI) (W/(m³/h))	0.094					
Control typology	Manual control					
Maximum external leakage rates (%)	2.7					
Declared typology	RVU UVU					
Sound power level (dB(A))	46					
The annual electricity consumption (AEC) (kWh/a)	Cold		Average		Warm	
	118		118		118	
The annual heating saved (AHS) (kWh/a)	Cold		Average		Warm	
	3355		1715		776	