

Sileo Design DC 100 H

High-performance low noise extract fans with DC motors

- Impeller type: Mixed-flow
- Casing material: Plastic
- Backdraft protection: Backdraft damper
- Humidity sensor
- Timer: Turn off timer

	Unit of measurement	Sileo Design DC 100 H	
Speed	-	1	2
Minimum supply voltage	V	220	
Maximum supply voltage	V	240	
Power supply frequency	Hz	50/60	
Maximum airflow	m³/h	58	93
Ambient air temperature min	°C	1	
Ambient air temperature max	°C	40	
Ingress protection rating	-	IP45	
Impeller material	-	Plastic	

Dimensions

Ø D	B	L	L1
99	200	131	50

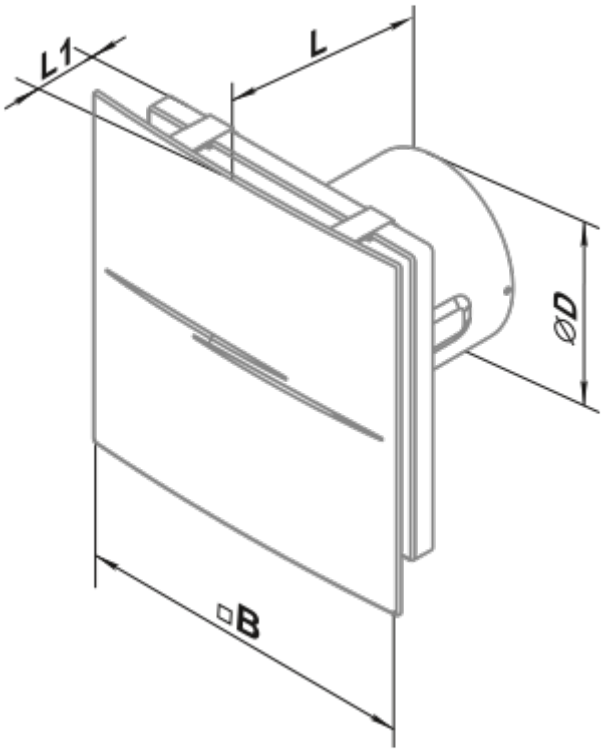
L1
L
ØD
□B

Ecodesign

Trademark	Blauberg					
Model	Sileo Design DC 100 H					
Specific energy consumption (SEC) (kWh/(m²/a))	Cold		Average		Warm	
	-54.9	A+	-27.8	B	-12.3	E
Type of ventilation unit	Unidirectional					
Type of drive installed	2-speed					
Type of heat recovery system	None					
Maximum flow rate (m³/h)	93					
Electric power input (W)	2.7					
Reference flow rate (m³/s)	0.016					
Specific power input (SPI) (W/(m³/h))	0.026					
Control typology	Local demand control					
Maximum external leakage rates (%)	2.7					
Declared typology	RVU UVU					
Sound power level (dB(A))	41					
The annual electricity consumption (AEC) (kWh/a)	Cold		Average		Warm	
	19		19		19	
The annual heating saved (AHS) (kWh/a)	Cold		Average		Warm	
	5536		2830		1280	