

Sileo Pro 100 TR

Redesigned axial low-noise fans for extract ventilation

- Impeller type: Axial
- Casing material: Plastic
- Short spigot
- Backdraft protection: Backdraft damper
- Timer: Turn on timer, Turn off timer

	Unit of measurement	Sileo Pro 100 TR
Maximum supply voltage	V	240
Minimum supply voltage	V	220
Power supply frequency	Hz	50
Maximum airflow	m³/h	98
Ambient air temperature min	°C	1
Ambient air temperature max	°C	40
Ingress protection rating	-	IP45
Impeller material	-	Plastic

Dimensions

ØD	H	L	L1
100	158	81	26

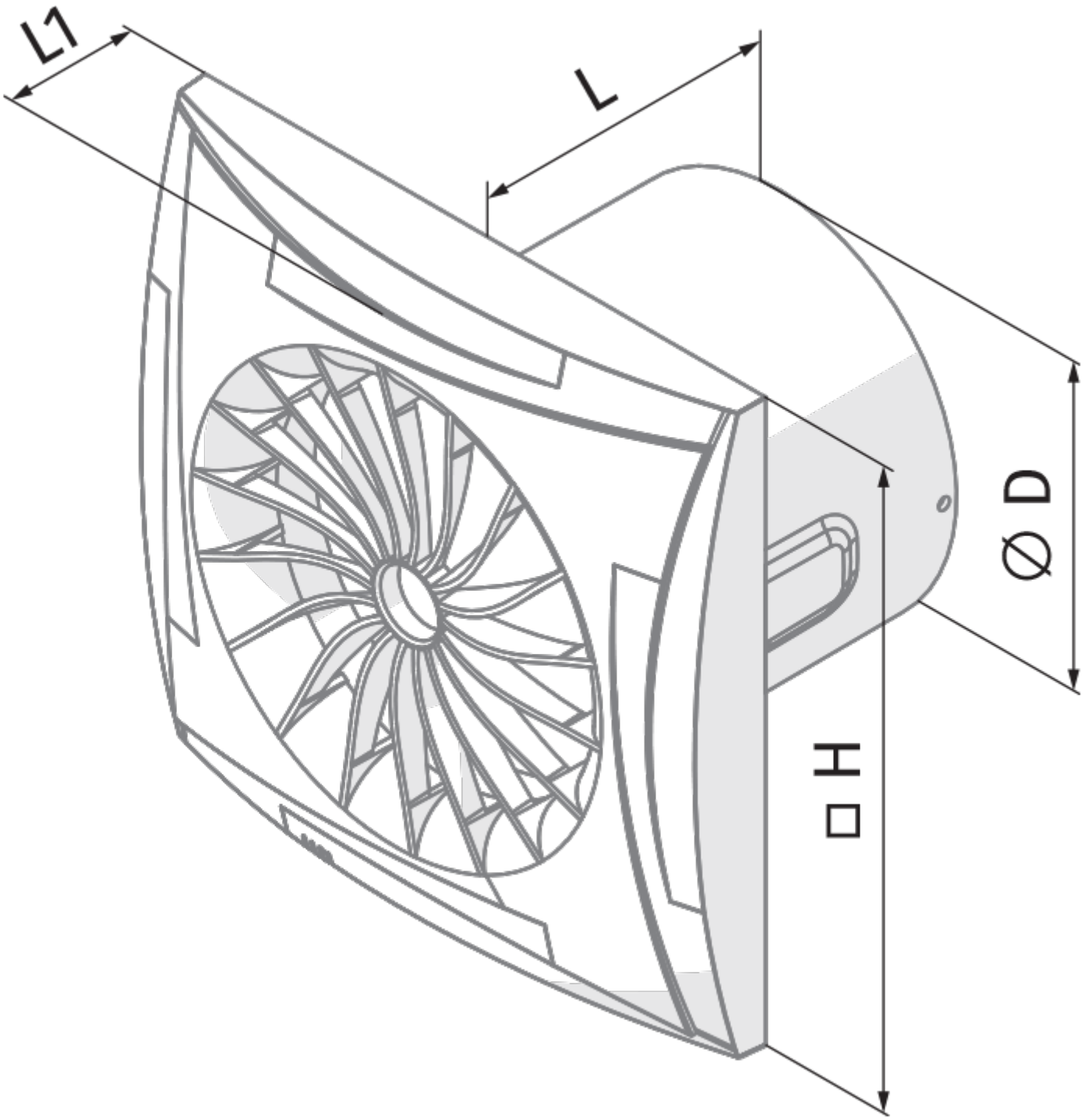
L1
L
Ø D
□ H

Ecodesign

Trademark	Blauberg					
Model	Sileo Pro 100 TR					
Specific energy consumption (SEC) (kWh/(m²/a))	Cold		Average		Warm	
	-31.1	B	-14.7	E	-5.3	F
Type of ventilation unit	Unidirectional					
Type of drive installed	Single speed					
Type of heat recovery system	None					
Maximum flow rate (m³/h)	97					
Electric power input (W)	7.5					
Reference flow rate (m³/s)	0.019					
Specific power input (SPI) (W/(m³/h))	0.077					
Control typology	Manual control					
Maximum external leakage rates (%)	2.7					
Sound power level (dB(A))	45					
Declared typology	RVU UVU					
The annual electricity consumption (AEC) (kWh/a)	Cold		Average		Warm	
	97		97		97	
The annual heating saved (AHS) (kWh/a)	Cold		Average		Warm	
	3355		1715		776	