

Slim 100 S

Extract fans

- Casing material: Plastic
- Backdraft protection: Backdraft damper
- Pull cord

	Unit of measurement	Slim 100 S
Minimum supply voltage	V	220
Maximum supply voltage	V	240
Power supply frequency	Hz	50
Maximum airflow	m³/h	105
Ambient air temperature min	°C	1
Ambient air temperature max	°C	40
Ingress protection rating	-	IP24
Impeller material	-	Plastic

Dimensions

a	c	Ø d	e
150	87	100	13

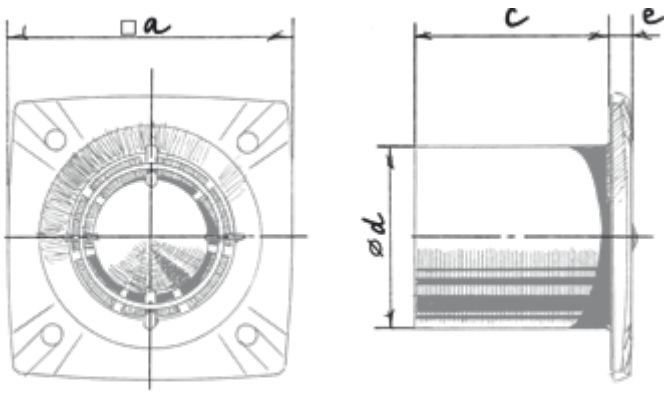
□a
c
e
ød

Ecodesign

Trademark	Blauberg					
Model	Slim 100 S					
Specific energy consumption (SEC) (kWh/(m²/a))	Cold		Average		Warm	
	-29.4	B	-13	E	-3.6	F
Type of ventilation unit	Unidirectional					
Type of drive installed	Single speed					
Type of heat recovery system	None					
Maximum flow rate (m³/h)	105					
Electric power input (W)	14					
Reference flow rate (m³/s)	0.02					
Specific power input (SPI) (W/(m³/h))	0.133					
Control typology	Manual control					
Maximum external leakage rates (%)	2.7					
Declared typology	RVU UVU					
Sound power level (dB(A))	53					
The annual electricity consumption (AEC) (kWh/a)	Cold		Average		Warm	
	167		167		167	
The annual heating saved (AHS) (kWh/a)	Cold		Average		Warm	
	3355		1715		776	

Accessories

Thyristor speed controllers

Name	Photo	Description
CDT E1.8		Thyristor speed controller