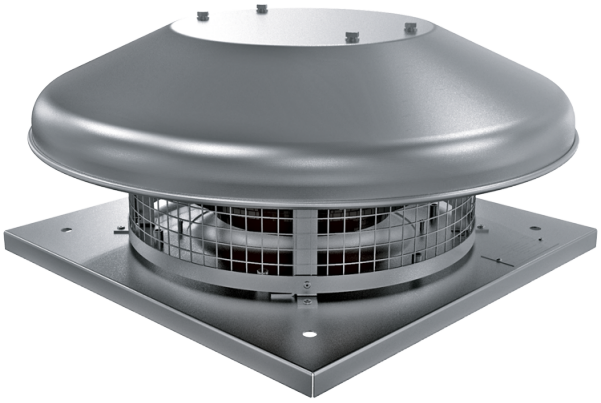

Tower-HC 190 2E

Roof centrifugal fans

• Impeller type: Centrifugal impeller with backward curved blades
• Casing material: Coated steel

	Unit of measurement	Tower-HC 190 2E	
Phases	-	1	
Minimum supply voltage	V	230	
Maximum supply voltage	V	230	
Power supply frequency	Hz	50	60
Maximum airflow	m³/h	670	
Weight	kg	6	
Transported air temperature (max)	°C	50	
Transported air temperature (min)	°C	-25	
Ingress protection rating	-	IPX4	
Ingress protection rating of the drive	-	IP44	
Size	mm	190	

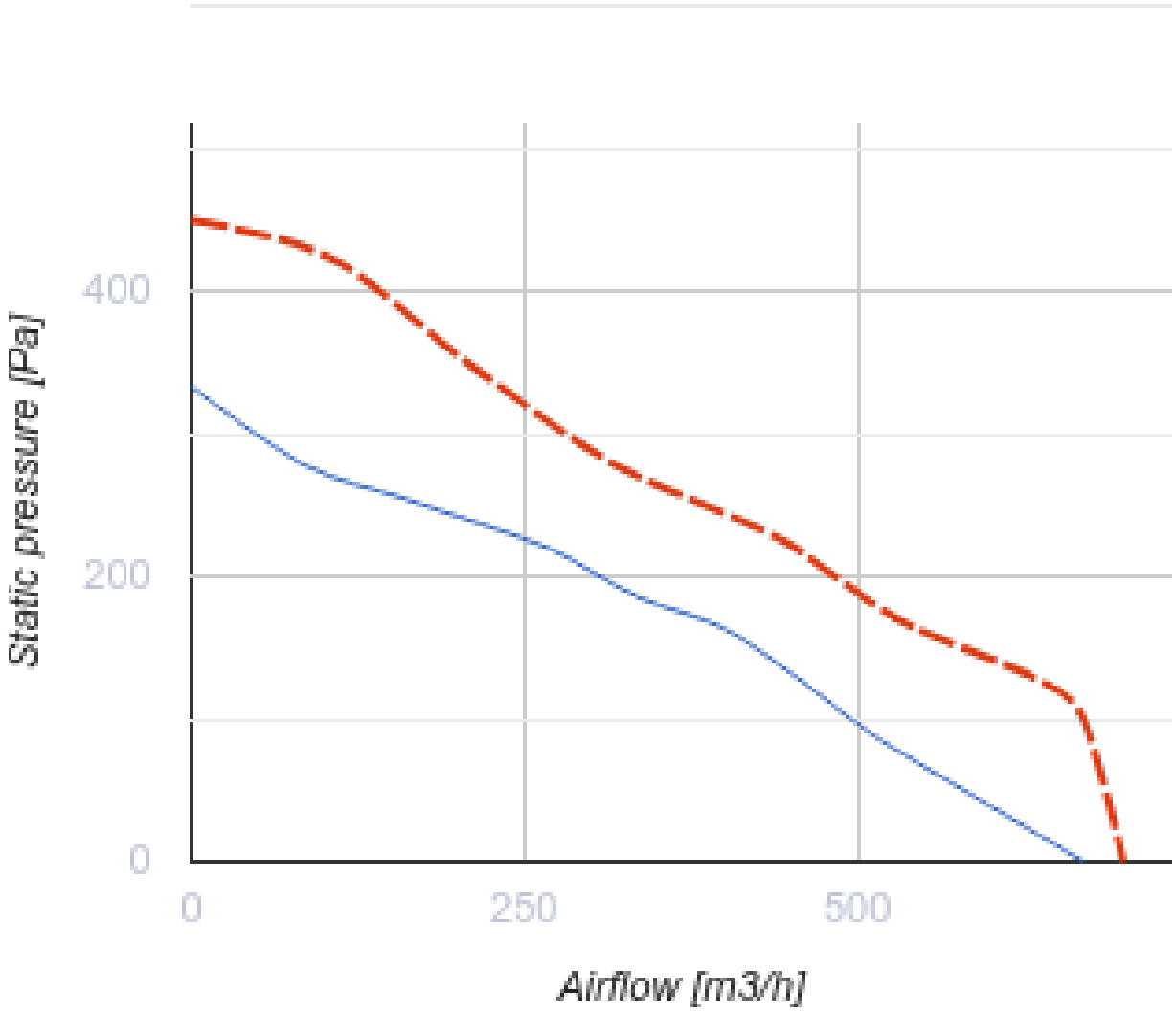
Static pressure [Pa]
400
200
0
0
250
500
Airflow [m3/h]

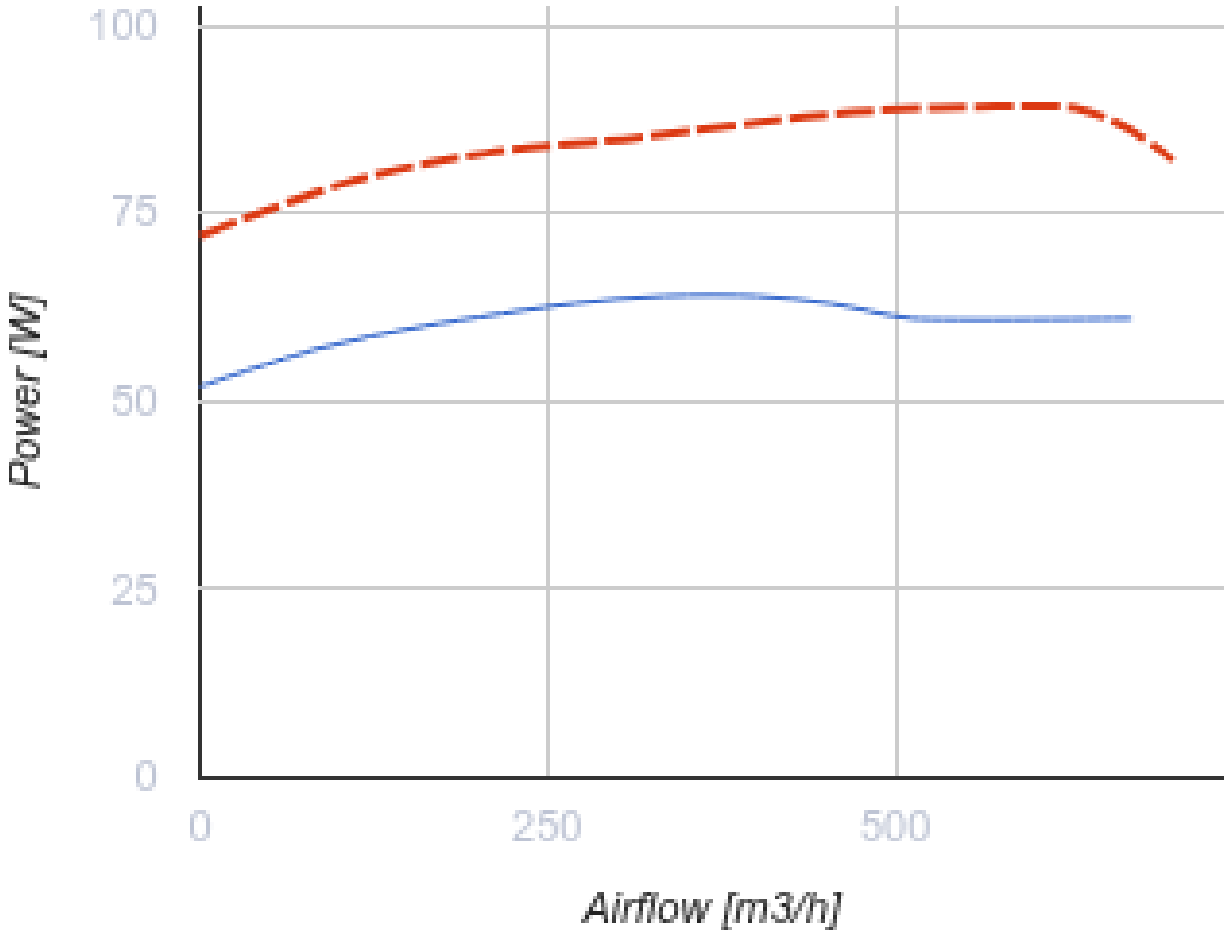

Dimensions

H	ØD	ØD1	L	L1
178	503	210	330	245

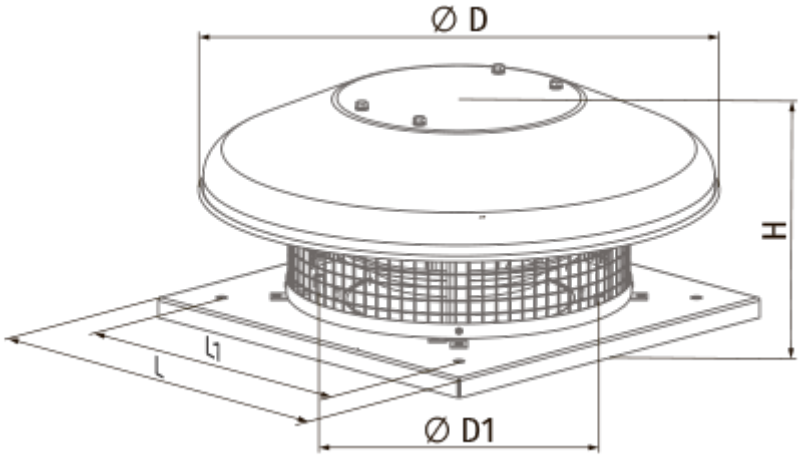
Ø D
H
L1
L
Ø D1

Ecodesign

Trademark	Blauberg
Model	Tower-HC 190 2E
Type of drive installed	Integrated VSD
Type of heat recovery system	None
Nominal external pressure (Pa)	163
Maximum external leakage rates (%)	2.7
Static efficiency (%)	33.9
Declared typology	NRVU UVU
Effective electric power input (kW)	0.064
Sound power level (dB(A))	64