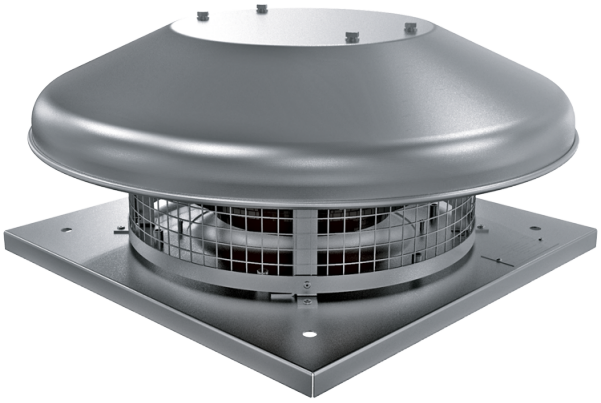

Tower-HC 250 2E

Roof centrifugal fans

• Impeller type: Centrifugal impeller with backward curved blades
• Casing material: Coated steel

	Unit of measurement	Tower-HC 250 2E	
Phases	-	1	
Maximum supply voltage	V	230	
Minimum supply voltage	V	230	
Power supply frequency	Hz	50	60
Maximum airflow	m³/h	1485	
Weight	kg	8	
Transported air temperature (max)	°C	50	
Transported air temperature (min)	°C	-25	
Ingress protection rating	-	IPX4	
Ingress protection rating of the drive	-	IP44	
Size	mm	250	

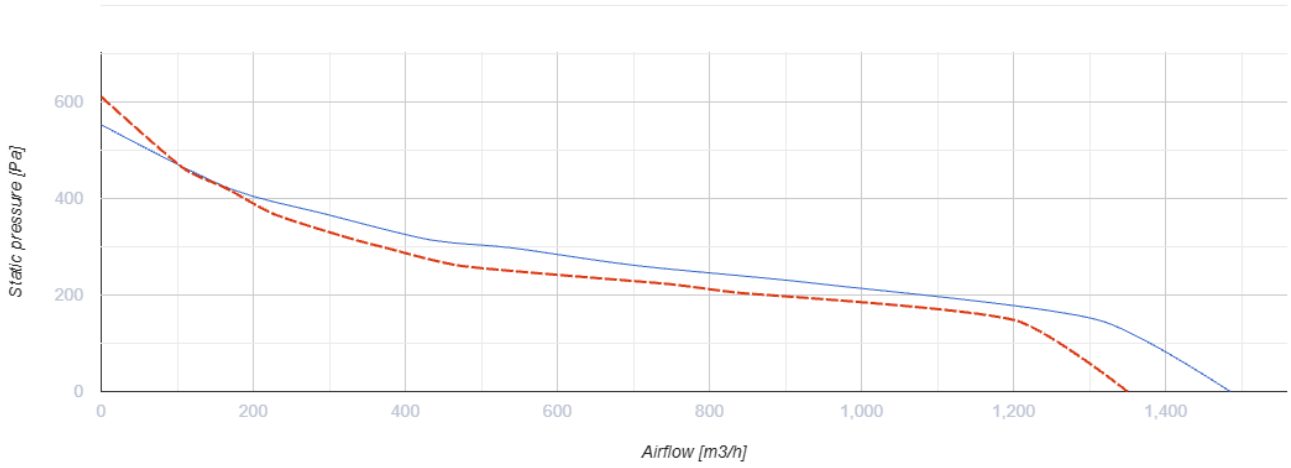

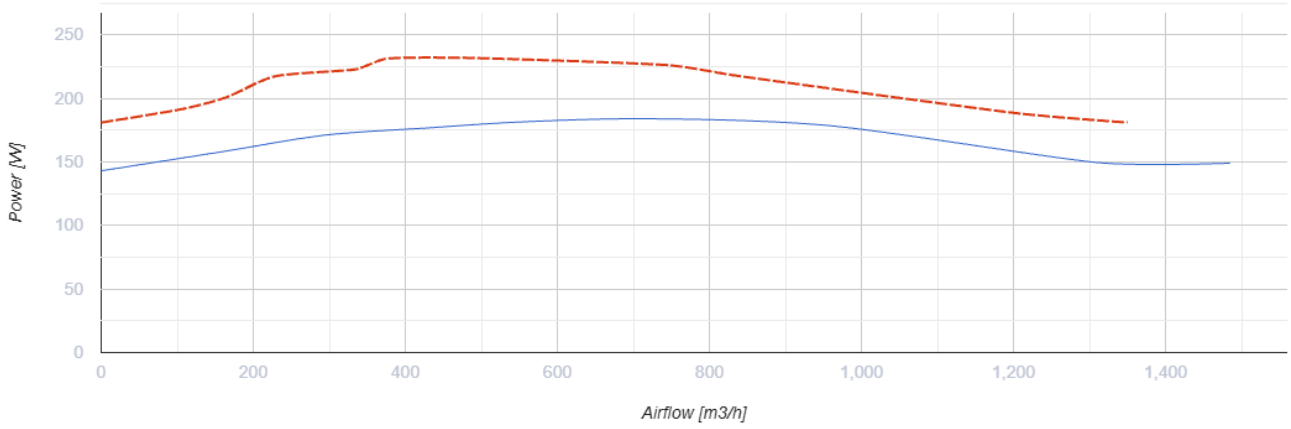

Dimensions

H	ØD	ØD1	L	L1
224	503	285	420	330

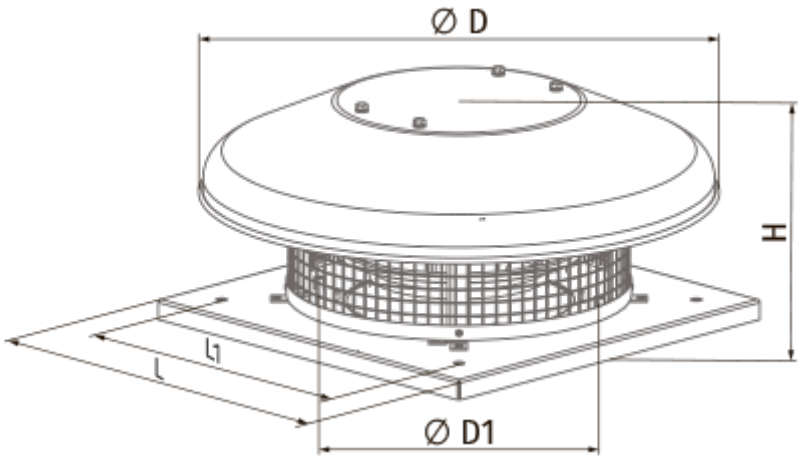

Ecodesign

Trademark	Blauberg
Model	Tower-HC 250 2E
Type of drive installed	Integrated VSD
Type of heat recovery system	None
Nominal external pressure (Pa)	144
Maximum external leakage rates (%)	2.7
Static efficiency (%)	41.4
Sound power level (dB(A))	67
Declared typology	NRVU UVU
Effective electric power input (kW)	0.149