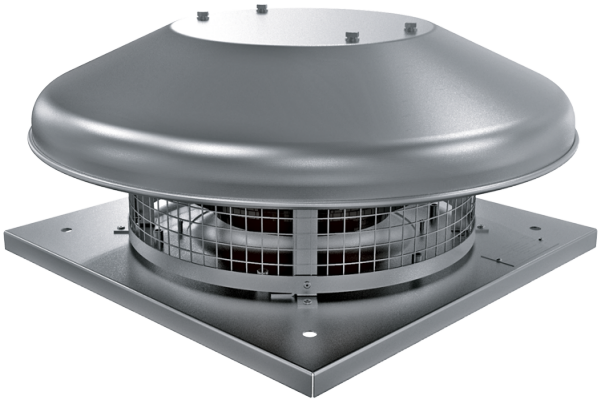

Tower-HC 310 4D

Roof centrifugal fans

• Impeller type: Centrifugal impeller with backward curved blades
• Casing material: Coated steel

	Unit of measurement	Tower-HC 310 4D	
Phases	-	3	
Maximum supply voltage	V	400	
Minimum supply voltage	V	400	
Power supply frequency	Hz	50	60
Maximum airflow	m^3/h	2300	
Weight	kg	11	
Transported air temperature (max)	°C	50	
Transported air temperature (min)	°C	-25	
Ingress protection rating	-	IPX4	
Ingress protection rating of the drive	-	IP44	
Size	mm	310	

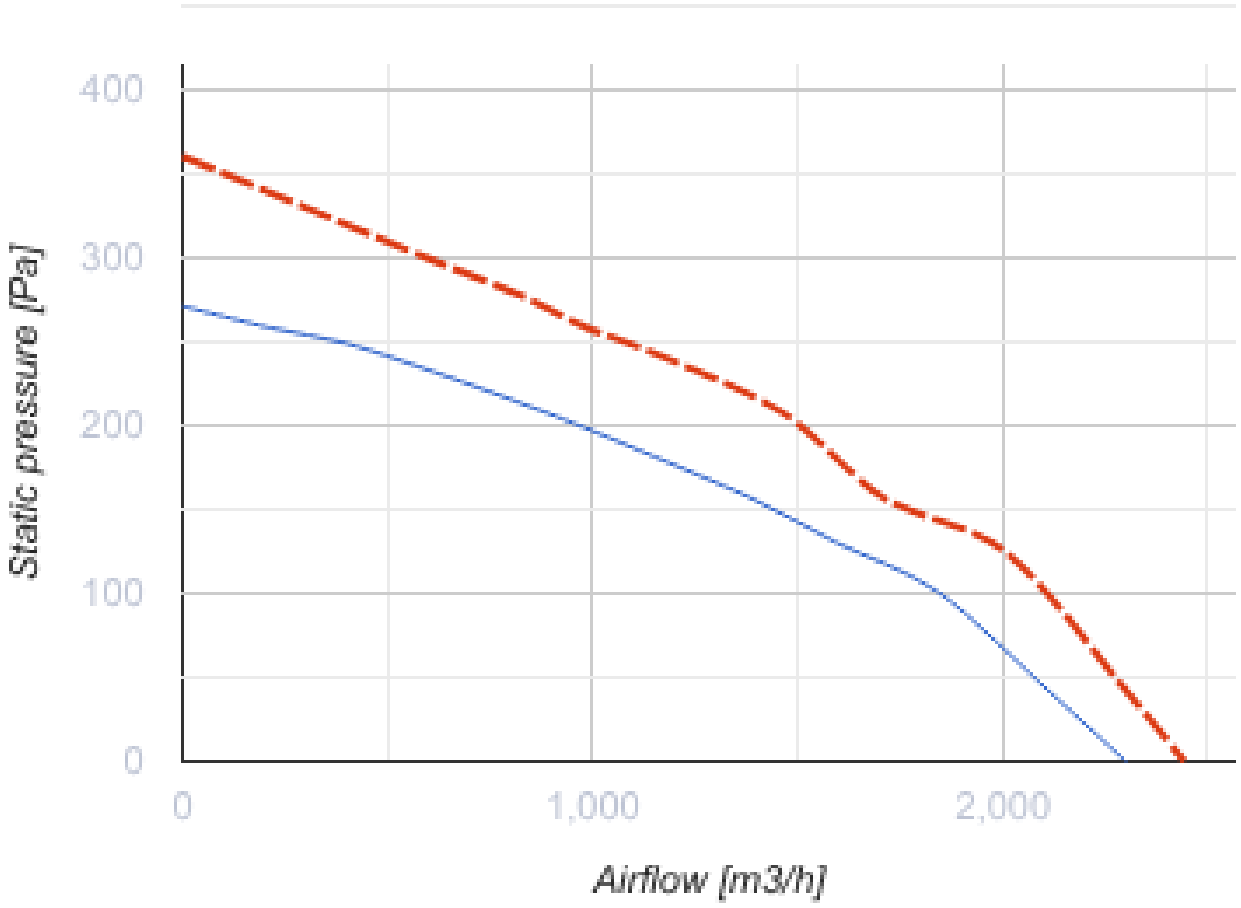
400
300
200
100
0
Static pressure [Pa]
0
1,000
2,000
Airflow [m3/h]

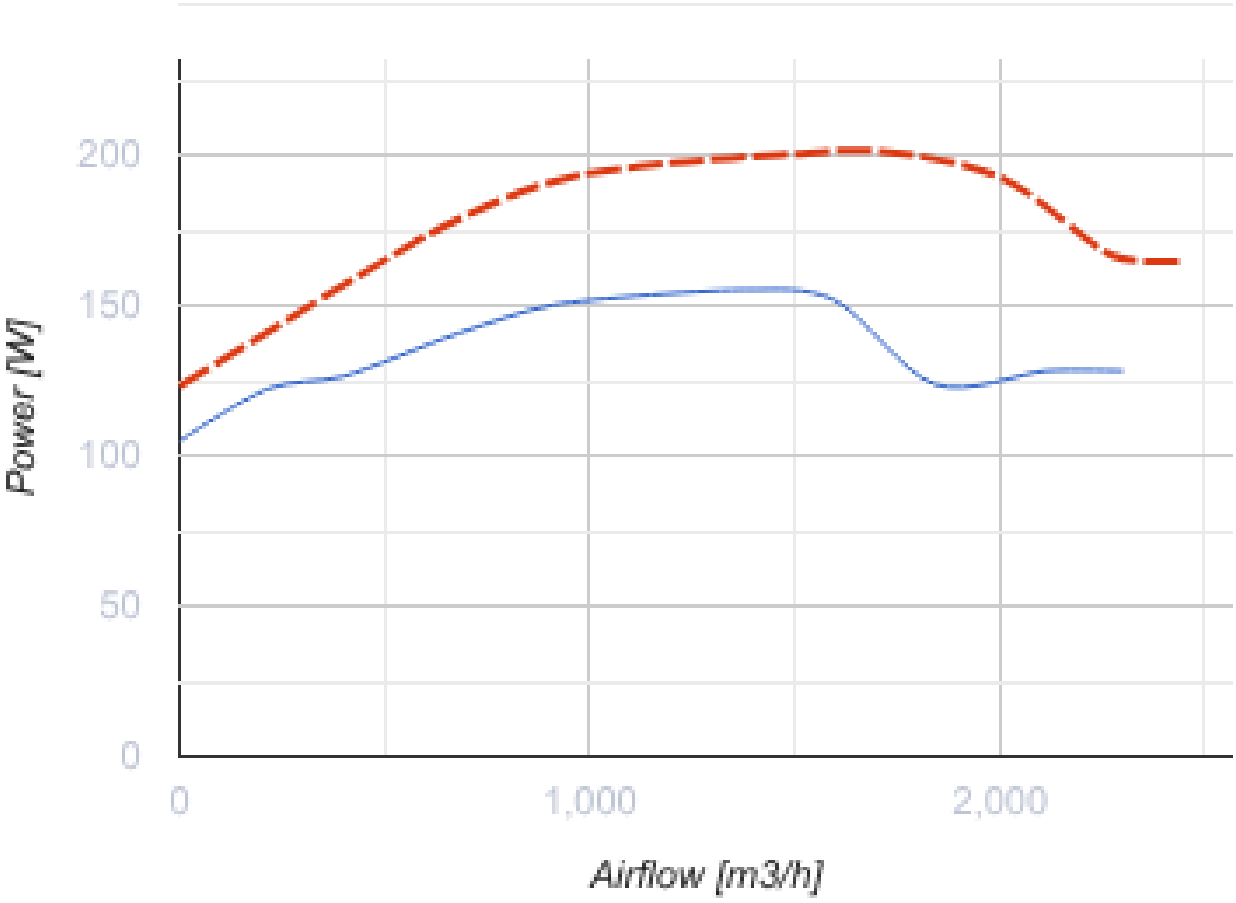

Dimensions

H	ØD	ØD1	L	L1
277	623	285	420	330

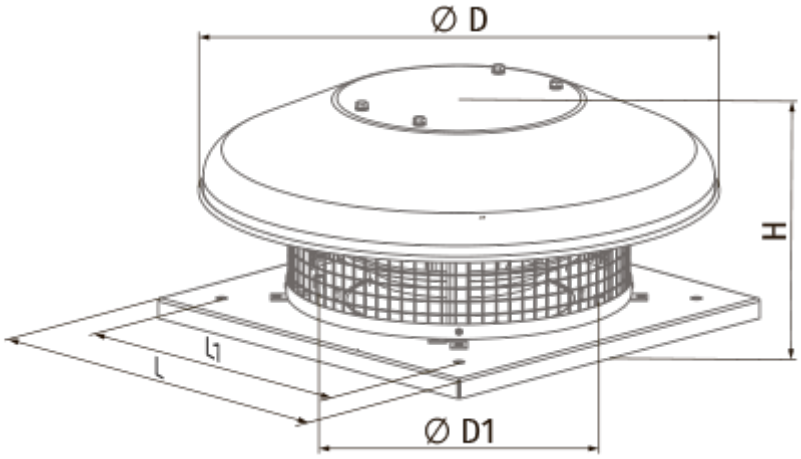

Ecodesign

Trademark	Blauberg
Model	Tower-HC 310 4D
Type of drive installed	External MSD or VSD
Type of heat recovery system	None
Nominal external pressure (Pa)	101
Maximum external leakage rates (%)	2.7
Static efficiency (%)	50.6
Sound power level (dB(A))	67
Declared typology	NRVU UVU
Effective electric power input (kW)	0.104