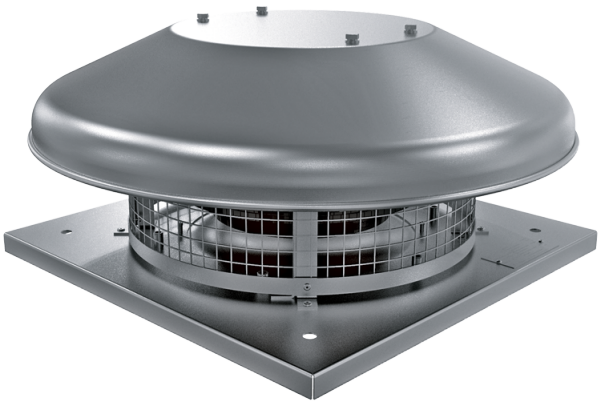

Tower-HC EC 190 A

Roof centrifugal fans with EC-motors

• Impeller type: Centrifugal impeller with backward curved blades
• Casing material: Aluminium

	Unit of measurement	Tower-HC EC 190 A
Phases	-	1
Maximum supply voltage	V	230
Minimum supply voltage	V	230
Power supply frequency	Hz	50/60
Maximum airflow	m³/h	770
Weight	kg	7
Transported air temperature (max)	°C	60
Transported air temperature (min)	°C	-25
Ingress protection rating	-	IPX4
Ingress protection rating of the drive	-	IP55
Size	mm	190

Dimensions

H	ØD	ØD1	L	L1
178	503	210	330	245

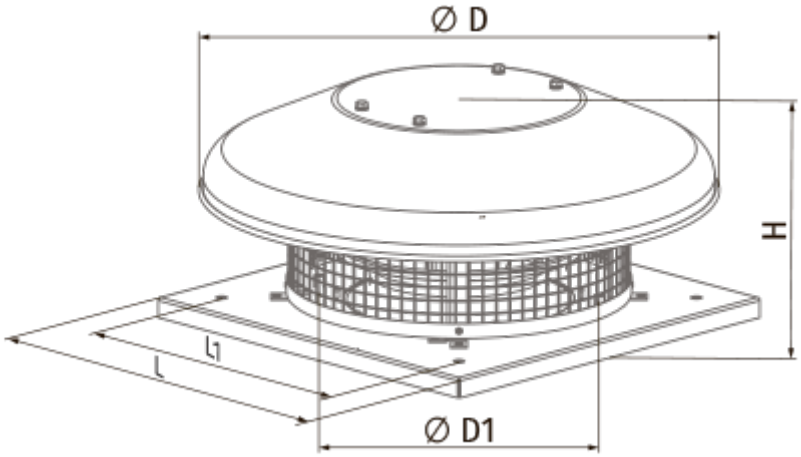

Accessories

EC motors regulators

Name	Photo	Description
CDT E/0-10		Speed control for EC motors