

# Trio 150 SH

Low noise extract axial fan

- Casing material: Plastic
- Backdraft protection: Backdraft damper
- Pull cord
- Humidity sensor
- Timer: Turn off timer

| | Unit of measurement | Trio 150 SH |
|---|---|---|
| Minimum supply voltage | V | 220 |
| Maximum supply voltage | V | 240 |
| Power supply frequency | Hz | 50 |
| Maximum airflow | m³/h | 255 |
| Weight | kg | 0.97 |
| Ambient air temperature min | °C | 1 |
| Ambient air temperature max | °C | 40 |
| Ingress protection rating | - | IP44 |
| Impeller material | - | Plastic |

## Dimensions

| a | c | Ø d | e |
|---|---|---|---|
| 206 | 100 | 148 | 23 |

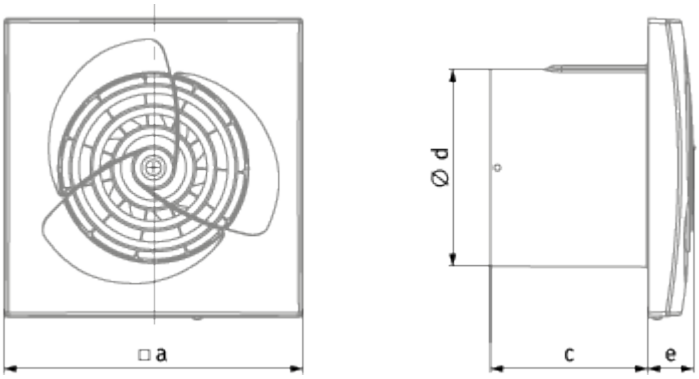
□a
Ø d
c
e

## Ecodesign

| | | | | | | |
|---|---|---|---|---|---|---|
| Trademark | Blauberg | | | | | |
| Model | Trio 150 SH | | | | | |
| Specific energy consumption (SEC) (kWh/(m²/a)) | Cold | | Average | | Warm | |
| | -53.1 | A+ | -26.1 | B | -10.6 | E |
| Type of ventilation unit | Unidirectional | | | | | |
| Type of drive installed | Single speed | | | | | |
| Type of heat recovery system | None | | | | | |
| Maximum flow rate (m³/h) | 255 | | | | | |
| Electric power input (W) | 28 | | | | | |
| Reference flow rate (m³/s) | 0.05 | | | | | |
| Specific power input (SPI) (W/(m³/h)) | 0.11 | | | | | |
| Control typology | Local demand control | | | | | |
| Maximum external leakage rates (%) | 2.7 | | | | | |
| Declared typology | RVU UVU | | | | | |
| Sound power level (dB(A)) | 55 | | | | | |
| The annual electricity consumption (AEC) (kWh/a) | Cold | | Average | | Warm | |
| | 89 | | 89 | | 89 | |
| The annual heating saved (AHS) (kWh/a) | Cold | | Average | | Warm | |
| | 5536 | | 2830 | | 1280 | |