

Trio One EC T

Silent extract fan with an EC motor

- Impeller type: Mixed-flow
- Casing material: Plastic
- Backdraft protection: Backdraft damper
- Timer: Turn off timer

	Unit of measurement	Trio One EC T
Maximum supply voltage	V	240
Minimum supply voltage	V	220
Power supply frequency	Hz	50/60
Maximum airflow	m³/h	95
Ingress protection rating	-	IP44 Zone 1
Impeller material	-	Plastic

Dimensions

Ø D	H	L	L1
99	160	79	19

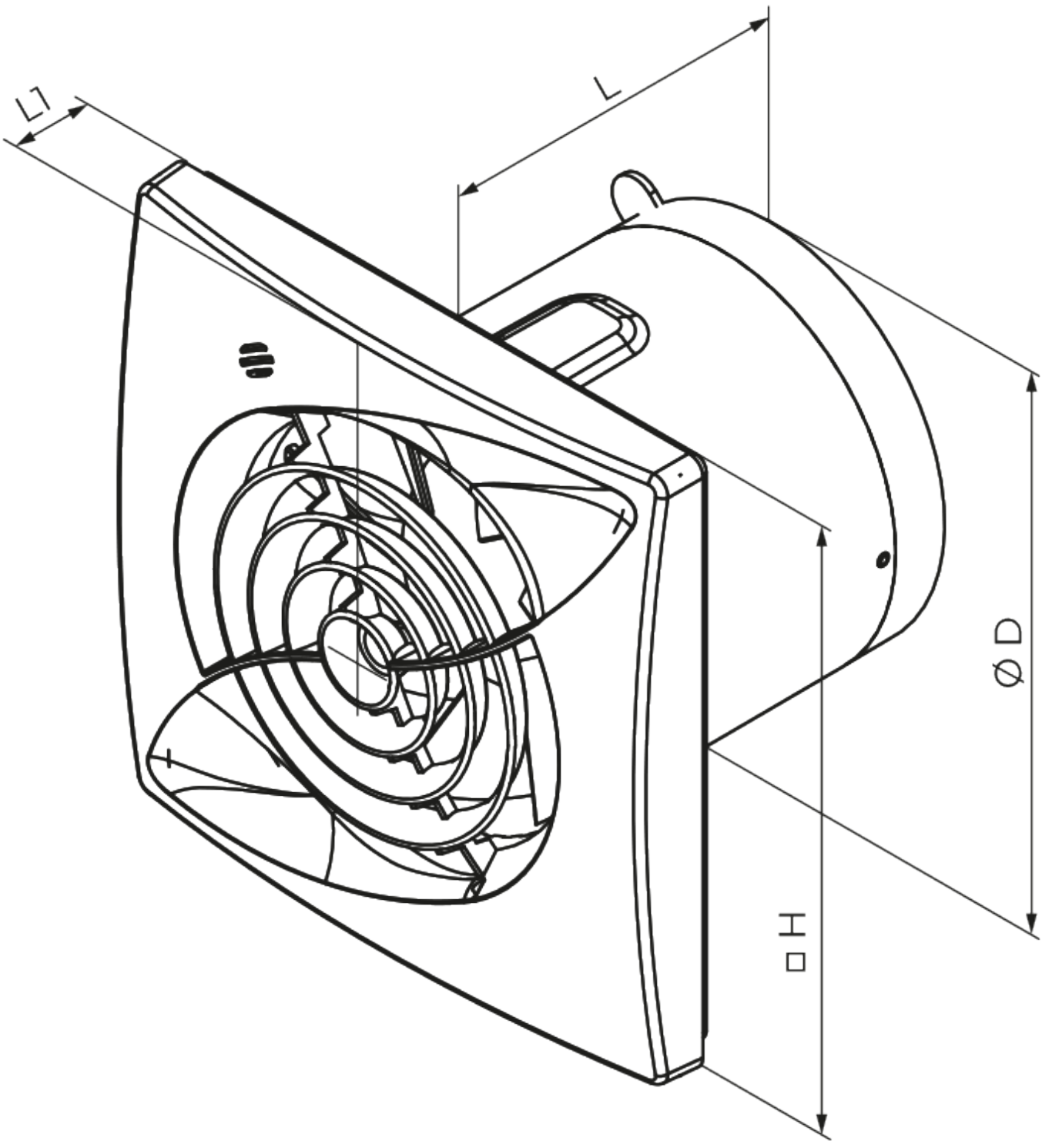
L1
L
ØD
□H