

Turbo 200 GT1

Mixed-flow inline fans

- Control: Built-in speed controller
- Impeller type: Mixed-flow
- Casing material: Polypropylene
- Installation in any position
- Cable with mains plug
- Temperature sensor: Built-in
- Timer: Turn off timer

	Unit of measurement	Turbo 200 GT1	
Speed	-	1	2
Phases	-	1	
Minimum supply voltage	V	230	
Maximum supply voltage	V	230	
Power supply frequency	Hz	50/60	
Maximum airflow	m³/h	830	1040
Weight	kg	3.95	
Transported air temperature (max)	°C	60	
Ingress protection rating	-	IPX4	
Ingress protection rating of the drive	-	IPX4	
Impeller material	-	Plastic	

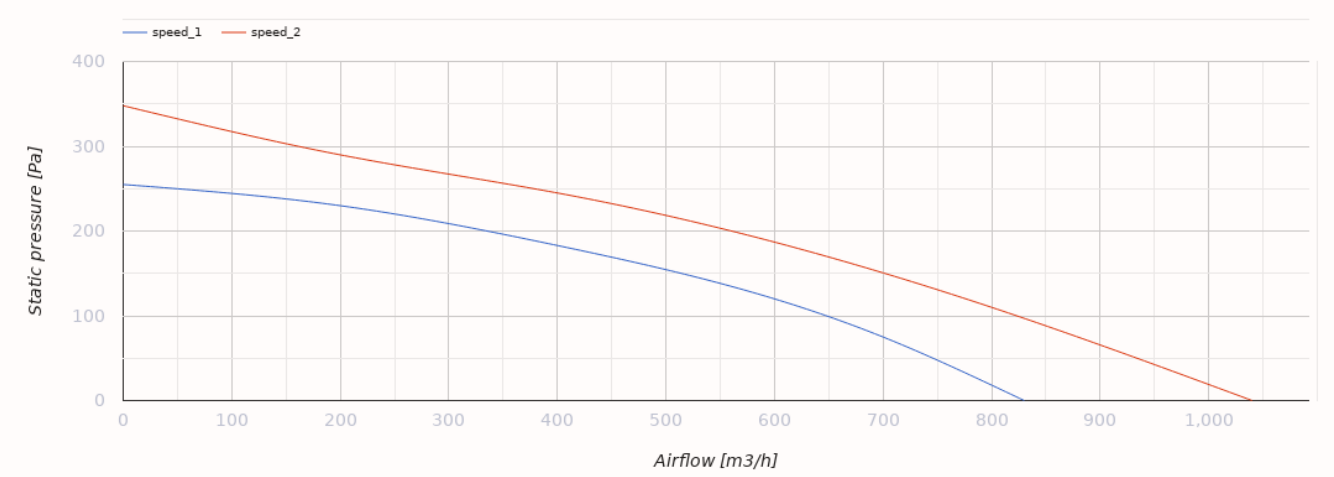

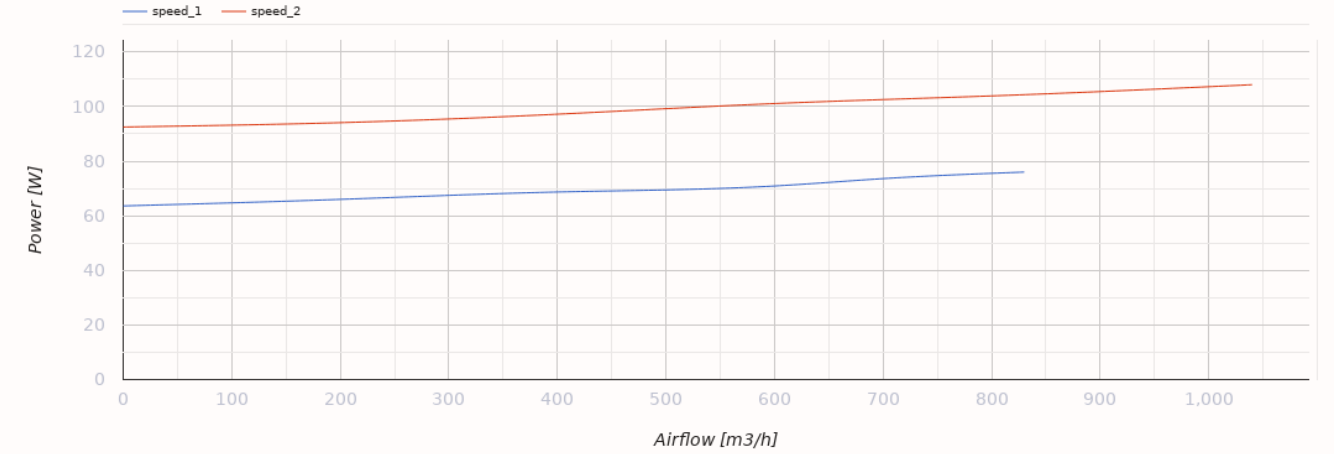

Dimensions

ØD	ØD1	B	H	L
199	209	239	261	295.5

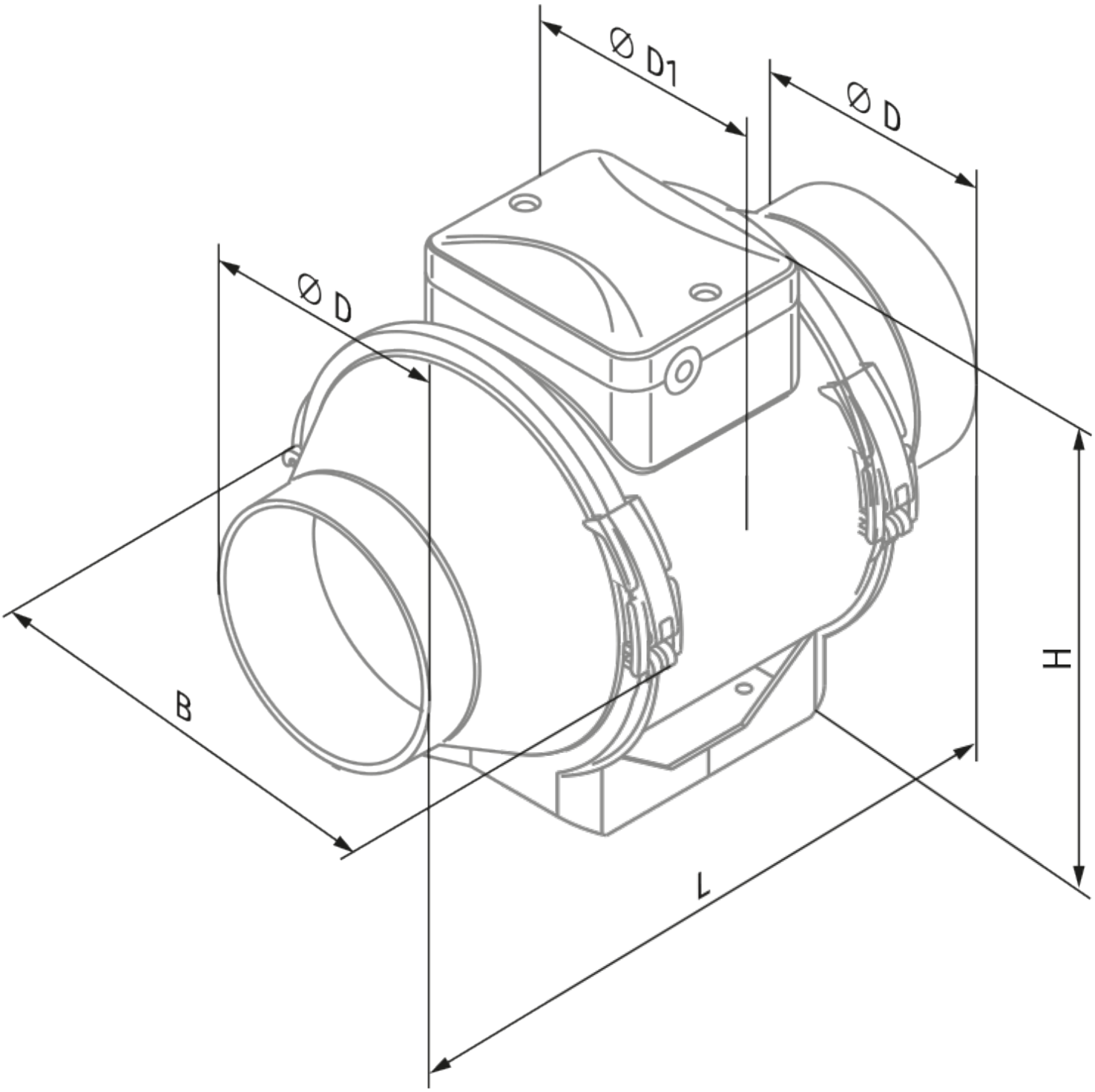
Ø D1
Ø D
Ø D
B
H
L

Ecodesign

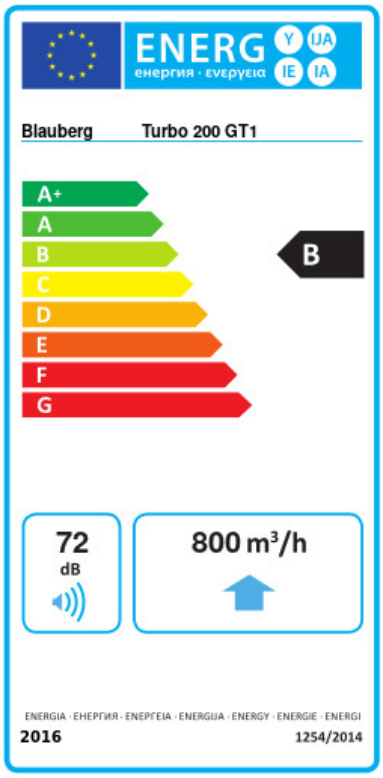

Trademark	Blauberg					
Model	Turbo 200 GT1					
Specific energy consumption (SEC) (kWh/(m²/a))	Cold		Average		Warm	
	-53.6	A+	-26.5	B	-11	E
Type of ventilation unit	Unidirectional					
Type of drive installed	Variable speed					
Type of heat recovery system	None					
Maximum flow rate (m³/h)	800					
Electric power input (W)	108					
Reference flow rate (m³/s)	0.156					
Reference pressure difference (Pa)	50					
Specific power input (SPI) (W/(m³/h))	0.136					
Control typology	Local demand control					
Maximum external leakage rates (%)	2.7					
Declared typology	RVU UVU					
Sound power level (dB(A))	72					
The annual electricity consumption (AEC) (kWh/a)	Cold		Average		Warm	
	72		72		72	
The annual heating saved (AHS) (kWh/a)	Cold		Average		Warm	
	5536		2830		1280	

Accessories

For round ducts

Name	Photo	Description
SD 200/600		Silencers for round ducts
SD 200/900		Silencers for round ducts
SD 200/1200		Silencers for round ducts

For round ducts

Name	Photo	Description
KFBK 200		Filter boxes for round ducts
KFBT 200 G4	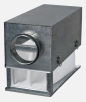	Filter boxes with pocket filters for round ducts
KFBT 200 F5		Filter boxes with pocket filters for round ducts
KFBT 200 F7		Filter boxes with pocket filters for round ducts

For round ducts

Name	Photo	Description
VRV 200		Backdraft dampers with spring for round ducts
VKA 200		Air dampers for round ducts

Water heaters

Name	Photo	Description
WKH 200-2		Duct water heaters for round ducts
WKH 200-4		Duct water heaters for round ducts

Electrical heaters

Name	Photo	Description
EKH 200-1.2		Duct electrical heaters for round ducts
EKH 200-1.7		Duct electrical heaters for round ducts

EKH 200-2.0		Duct electrical heaters for round ducts
EKH 200-2.4		Duct electrical heaters for round ducts
EKH 200-3.4		Duct electrical heaters for round ducts

Thyristor speed controllers

Name	Photo	Description
CDT E1.8		Thyristor speed controller
CDT1 E0.5		Multi-speed switches

Speed control switches

Name	Photo	Description
CDP-2/5		Multi-speed switch
CDP-2/10		Multi-speed switch

Humidity sensors

Name	Photo	Description
HSE / HSI 1.5		Sensors
TE / TI 1.5		Timers
LSE / LSI 1.5		Sensors
IRSE / IRSI 1.5		Sensors

Fittings

Name	Photo	Description
K 200		Clamp for round flexible ducts