

Vento Expert A100-1 L035 S W V.2

Single-room heat recovery units with Wi-Fi control

- Air flow in heat recovery mode: 54
- Sound pressure level LpA at 1 m: 51
- Heat exchanger type: Regenerative
- Heat exchanger material: Ceramic
- Control: Smartphone
- Casing material: Plastic
- CO2 sensor: Optional
- Shutters

	Unit of measurement	Vento Expert A100-1 L035 S W V.2			
Minimum supply voltage	V	100			
Maximum supply voltage	V	240			
Power supply frequency	Hz	50/60			
Air flow in ventilation mode	m³/h	18	30	58	108
Air flow in heat recovery mode	m³/h	9	15	29	54
Sound pressure level LpA at 1 m	dB(A)	23	27	40	51
Heat recovery efficiency, max	%	88			
Heat exchanger type	-	Regenerative			
Heat exchanger material	-	Ceramic			
Transported air temperature (max)	°C	40			
Transported air temperature (min)	°C	-20			
Ingress protection rating	-	IP24			

Dimensions

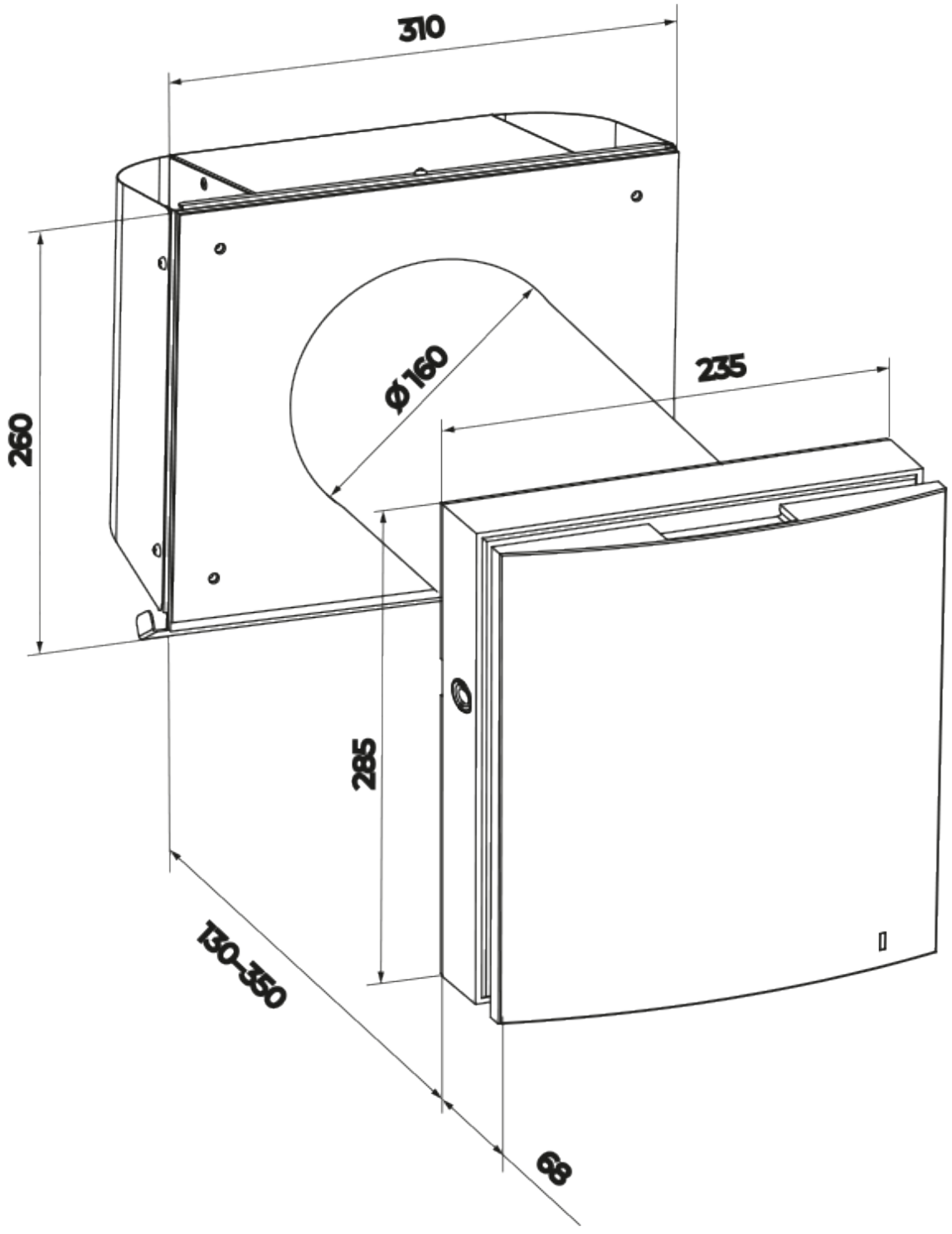
310
260
Ø160
235
285
130–350
68

Ecodesign

Trademark	Blauberg					
Model	Vento Expert A100-1 L035 S W V.2					
Specific energy consumption (SEC) (kWh/(m²/a))	Cold		Average		Warm	
	-78.3	A+	-38.4	A	-15.6	E
Type of ventilation unit	Bidirectional					
Type of drive installed	Variable speed					
Type of heat recovery system	Regenerative					
Thermal efficiency of heat recovery (%)	68					
Maximum flow rate (m³/h)	54					
Electric power input (W)	18					
Reference flow rate (m³/s)	0.008					
Specific power input (SPI) (W/(m³/h))	0.228					
Control typology	Local demand control					
Maximum internal leakage rates (%)	2.7					
Mixing rate (%)	1					
Airflow sensitivity at +20 Pa and -20 Pa (%)	0.2					
The indoor/outdoor air tightness (m³/h)	5.2					
Declared typology	RVU BVU					
Sound power level (dB(A))	50					
The annual electricity consumption (AEC) (kWh/a)	Cold		Average		Warm	
	132		132		132	

Accessories

CO2 sensors

Name	Photo	Description
CD-1		CO2 sensors
CD-2		CO2 sensors

Hoods

Name	Photo	Description
AH-10 chrome 160		Plastic hoods decoration of supply and exhaust vents of public, residential and industrial ventilation systems
PP 160/0.5		The outer hood is designed to prevent the ingress of water and large objects into the ventilation equipment from outside

Other accessories

Name	Photo	Description
FP2 Vento G3		G3 filter kit (2 pcs.)
FB-Vento Expert		Remote control

Other accessories

Name	Photo	Description
Pre-installation Kit Vento Expert A50-1 S		Pre-installation kit for mounting into thin walls. Includes: air duct; AH-S chrome 160 outer ventilation hood; polystyrene foam plug; polystyrene foam wedges.
Completion Kit Vento Expert A50-1 Pro V.2		Final mounting kit. Includes: cartridge with a heat exchanger, a fan and G3 filters; indoor unit with a controller and shutters; remote control.