

Vento inHome Plus M

Engineered for the premium segment, the new Inhome recuperator model combines an upgraded airflow with a highly reliable, high-performance thermal cartridge

- Air flow in heat recovery mode: 30
- Sound pressure level LpA at 1 m: 41
- Heat exchanger material: Ceramic
- Sound-insulated casing
- Enthalpy heat exchanger
- Control: Built-in control panel, Remote Control
- Humidity sensor

	Unit of measurement	Vento inHome Plus M		
Phases	-	1		
Minimum supply voltage	V	100		
Maximum supply voltage	V	240		
Power supply frequency	Hz	50/60		
Air flow in ventilation mode	m³/h	15	40	60
Air flow in heat recovery mode	m³/h	8	20	30
Sound pressure level LpA at 1 m	dB(A)	21	32	41
Heat recovery efficiency, max	%	95		
Heat exchanger material	-	Ceramic		
Transported air temperature (max)	°C	40		
Transported air temperature (min)	°C	-20		
Ambient air temperature min	°C	1		
Ambient air temperature max	°C	40		
Ingress protection rating	-	IP24		
Ambient air humidity max	%	65		
Minimum wall thickness	mm	330		
Maximum wall thickness	mm	490		

Dimensions

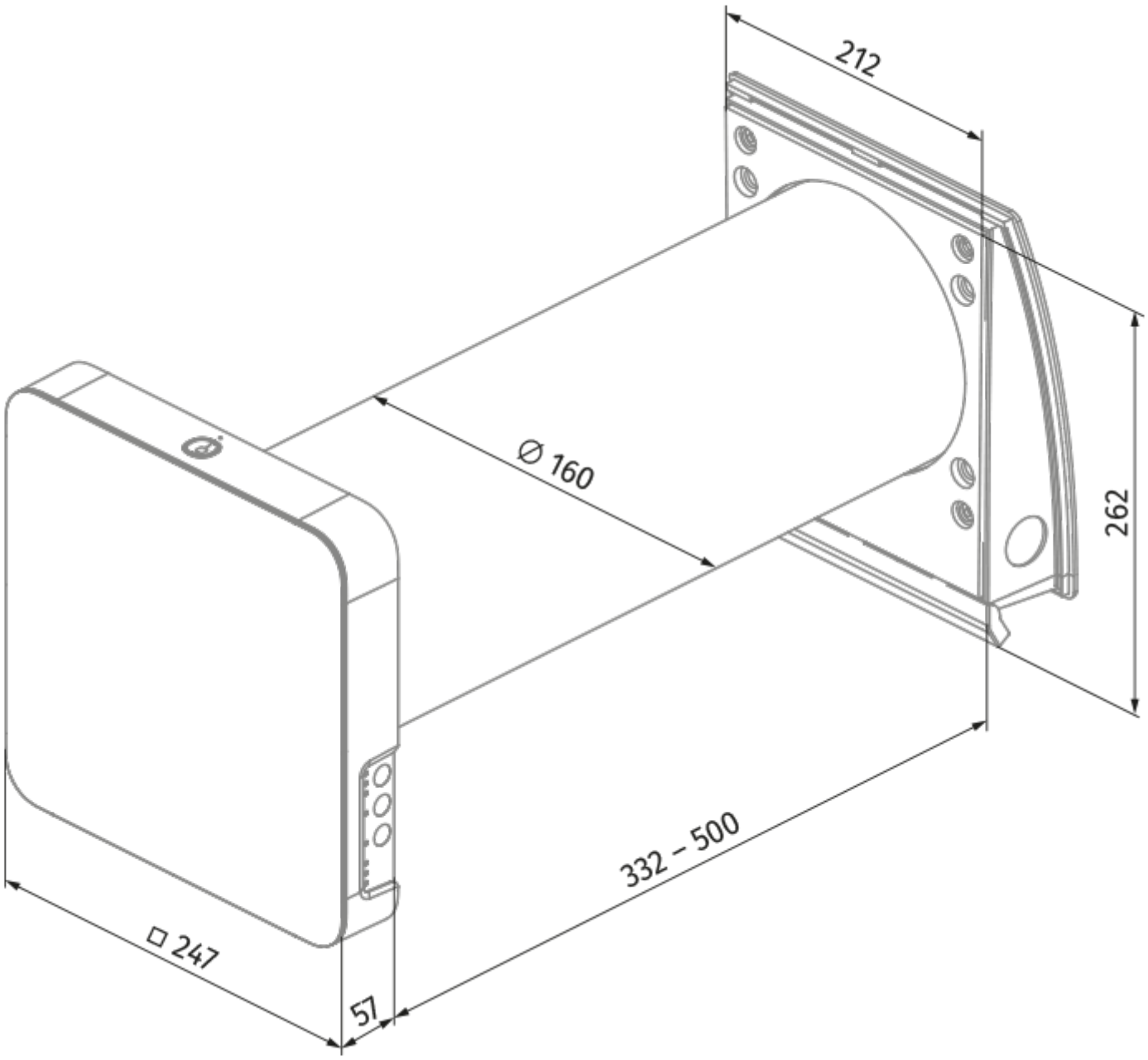

Ecodesign

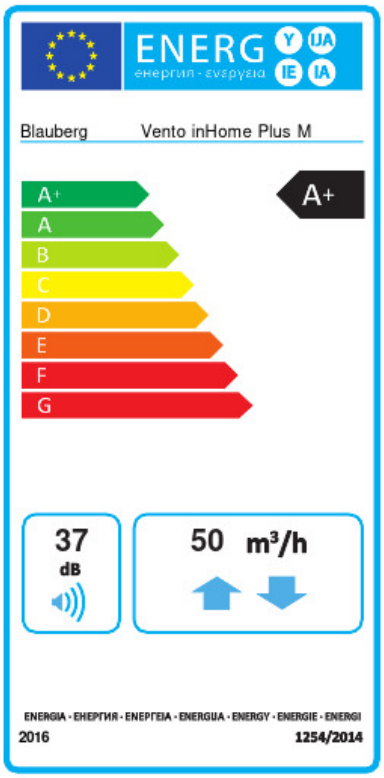

Trademark	Blauberg					
Model	Vento inHome Plus M					
Specific energy consumption (SEC) (kWh/(m²/a))	Cold		Average		Warm	
	-84.7	A+	-42.9	A+	-18.9	E
Type of ventilation unit	Bidirectional					
Type of drive installed	Variable speed					
Type of heat recovery system	Regenerative					
Thermal efficiency of heat recovery (%)	84					
Maximum flow rate (m³/h)	50					
Electric power input (W)	3.2					
Reference flow rate (m³/s)	0.005					
Specific power input (SPI) (W/(m³/h))	0.122					
Control typology	Local demand control					
Maximum internal leakage rates (%)	2.7					
Mixing rate (%)	1					
Airflow sensitivity at +20 Pa and -20 Pa (%)	1.4					
The indoor/outdoor air tightness (m³/h)	2.3					
Declared typology	RVU BVU					
Sound power level (dB(A))	37					
The annual electricity consumption (AEC) (kWh/a)	Cold		Average		Warm	
	37		37		37	
The annual heating saved (AHS) (kWh/a)	Cold		Average		Warm	
	86		44		20	