

VK 355

Air dampers for round ducts

- Casing material: Galvanized steel

	Unit of measurement	VK 355
Weight	kg	2.84

Dimensions

ØD	B	L
348	425	240

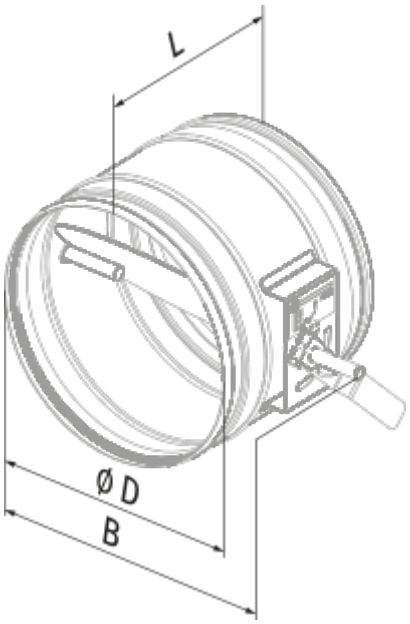
L
Ø D
B