

# VK 400

Air dampers for round ducts

- Casing material: Galvanized steel

| | Unit of measurement | VK 400 |
|---|---|---|
| Weight | kg | 3.38 |

## Dimensions

| ØD | B | L |
|---|---|---|
| 399 | 470 | 240 |

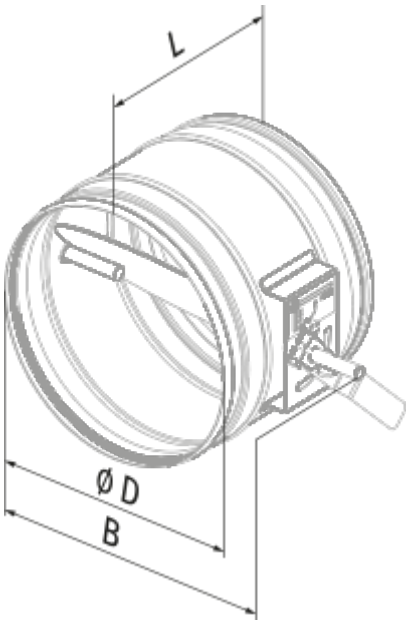
L
Ø D
B