

VK 40x20

Air dampers for rectangular ducts

- Casing material: Galvanized steel

	Unit of measurement	VK 40x20
Weight	kg	3

Dimensions

B	B1	B2	H	H1	L
400	440	460	200	240	202

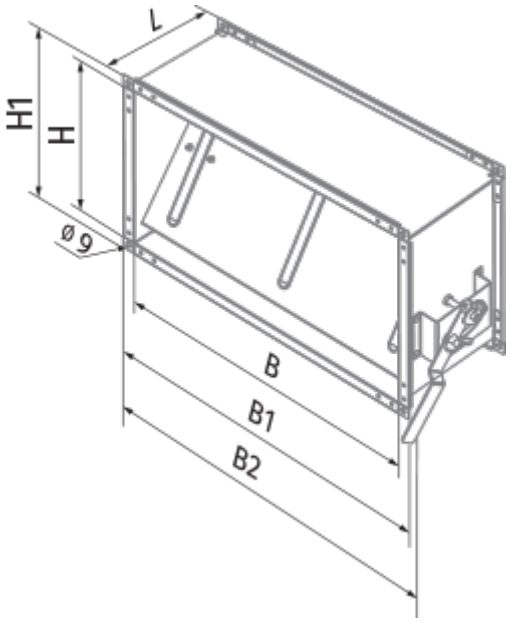
L
H1
H
ø9
B
B1
B2