

VK 450

Air dampers for round ducts

- Casing material: Galvanized steel

	Unit of measurement	VK 450
Weight	kg	3.94

Dimensions

ØD	B	L
449	520	240

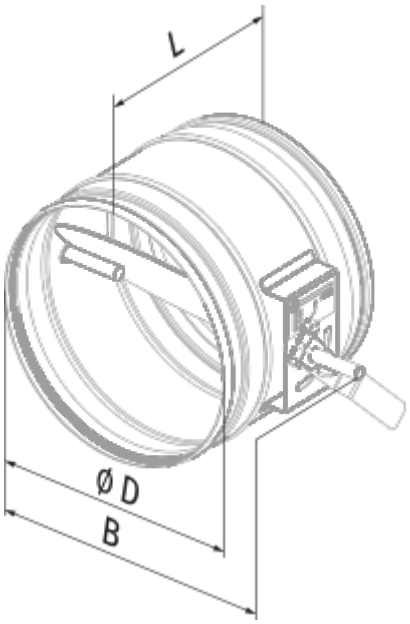
L
Ø D
B