

VK 60x35

Air dampers for rectangular ducts

- Casing material: Galvanized steel

	Unit of measurement	VK 60x35
Weight	kg	5.1

Dimensions

B	B1	B2	H	H1	L
600	640	660	350	390	202

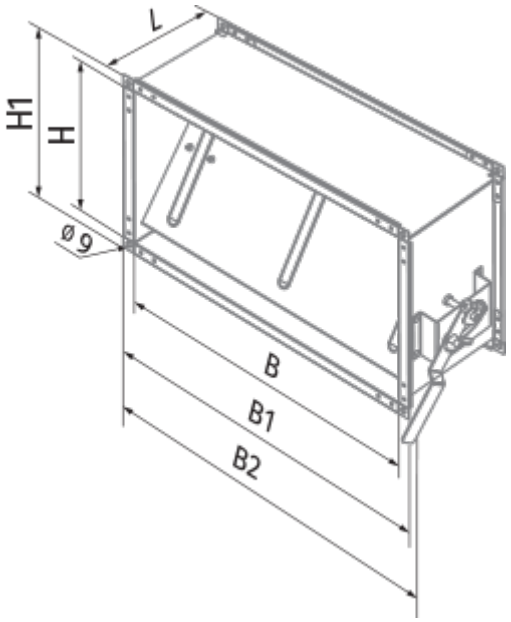
L
H1
H
ø9
B
B1
B2