

VK 80

Air dampers for round ducts

- Casing material: Galvanized steel

	Unit of measurement	VK 80
Weight	kg	0.57

Dimensions

ØD	B	L
79	140	200

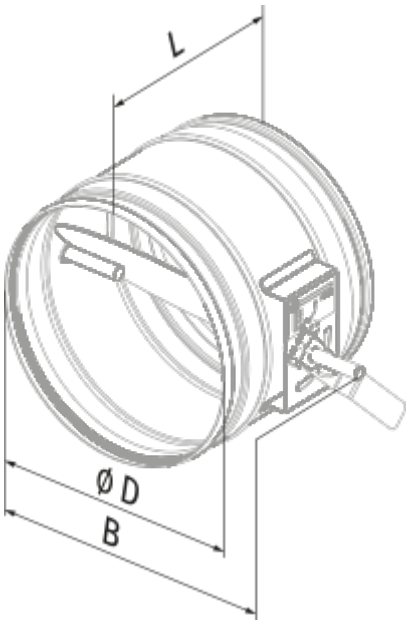
L
Ø D
B